EEE 4483

Digital Electronics and Pulse Techniques

Lecture 5: Analog-to-Digital (A/D) and Digital-to-Analog (D/A) Converters

Nadim Ahmed

Lecturer, Department of EEE

Islamic University of Technology (IUT)

Referred Textbook:

Electronic Instruments and Instrumentation Technology, 1st edition

by M. M. S. Anand

Analog vs Digital Signal

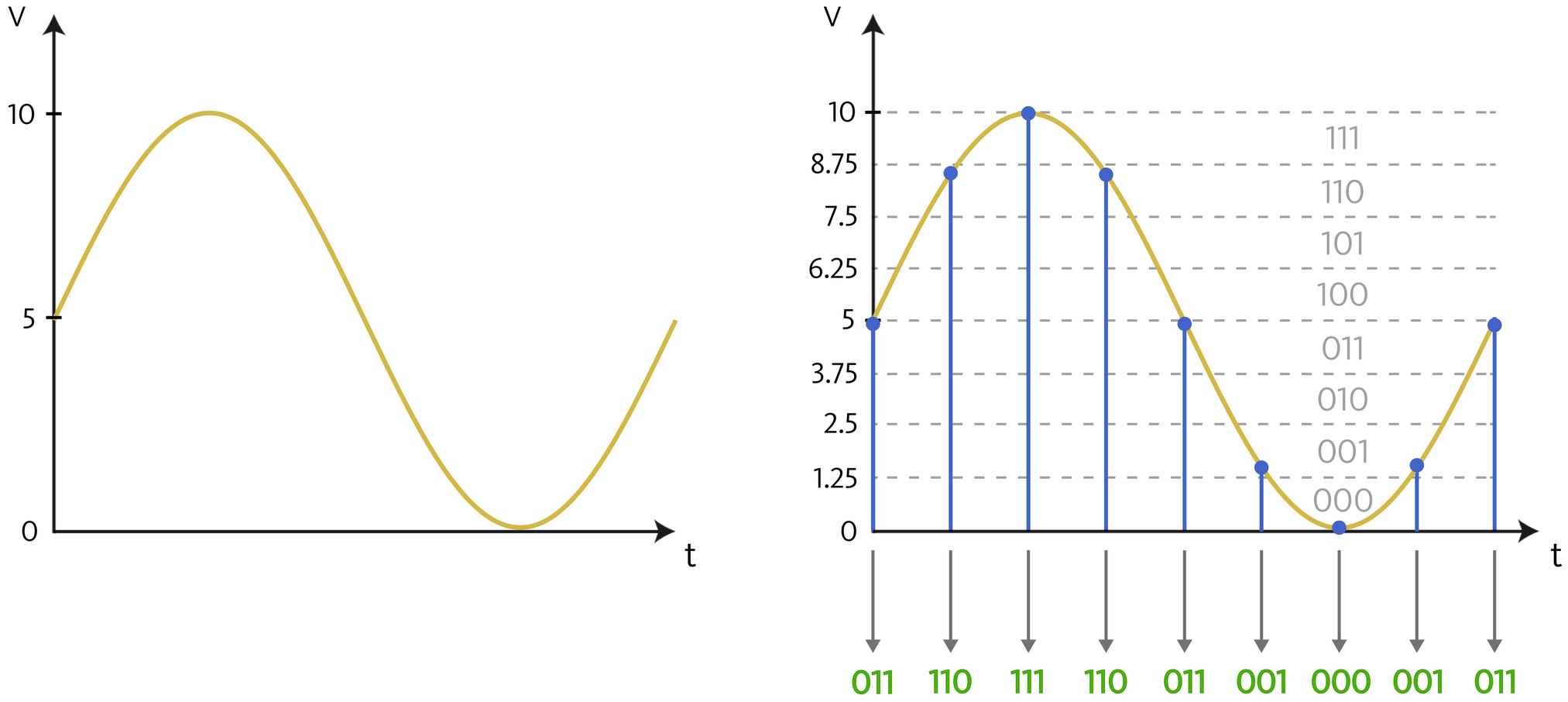

Fig: An analog signal and its digital equivalent

Analog vs Digital Signal

- Analog signals are continuous in both time and amplitude. They can take any value within a given range, meaning the number of possible values is infinite.
- Digital signals are discrete in both time and amplitude. They can only take specific, finite values at distinct time intervals. In most systems, each value (or level) is represented using binary codes (combinations of 0 and 1).
- Limitations of analog signals:
  - Analog signals pick up noise as they are being amplified
  - Analog signals are difficult to store
  - Analog systems are more expensive in relation to digital systems

Analog vs Digital Signal

- Advantages of digital signals:
  - Noise can be reduced by converting analog signals in 0s and 1s
  - Binary signals of 0s/1s can be easily stored in memory
  - Technology for fabricating digital systems has become so advanced that they can be produced at low cost

- One major limitation of a digital system is how accurately it represents the analog signals after reconstruction of analog signal from the digital

Analog to Digital Conversion Process

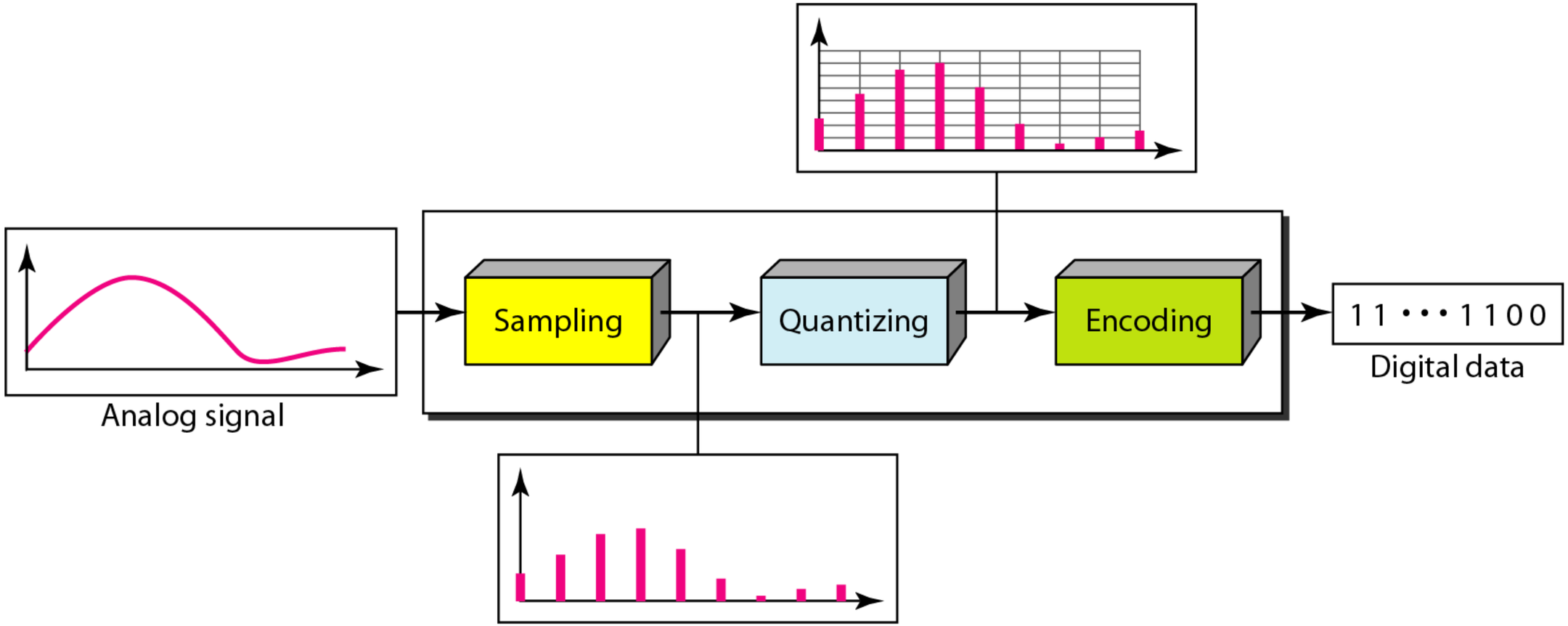

Fig: Analog to Digital Conversion Process

Sampling

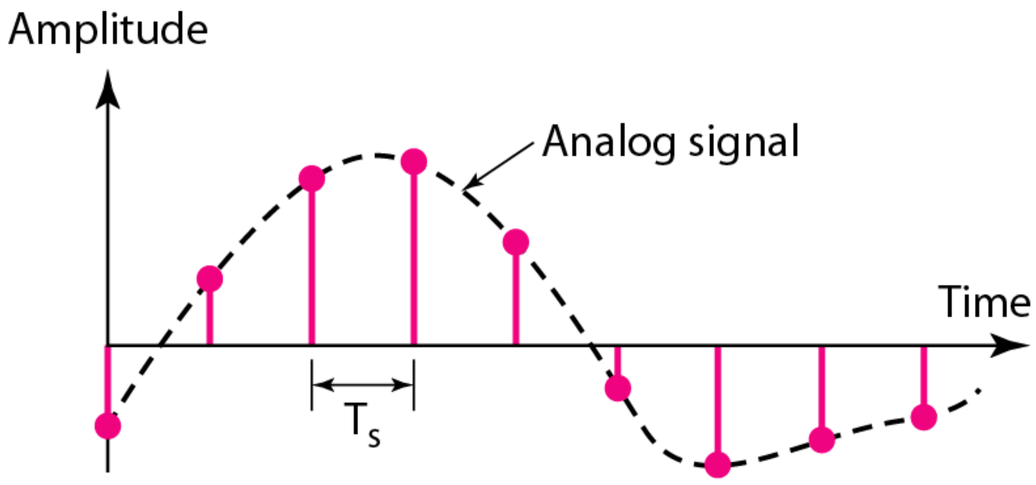

Sampling is the process of converting an analog signal, which is continuous in both time and amplitude, into a discrete-time signal, which is discrete in time but retains a continuous range of amplitude values.

- The sampling interval T_s must be selected carefully to ensure that the discrete-time representation accurately preserves the information content of the original analog signal
- To discuss the problem of losing information in the sampling process, it is necessary to recall Nyquist sampling theorem

Nyquist Sampling Theorem

Formulated by Harry Nyquist, the theorem states that a continuous-time (analog) signal can be perfectly reconstructed from its samples if the sampling frequency is at least twice the highest frequency present in the signal.

- Let the maximum frequency component of the analog signal $g(t)$ be f_m (in Hz).
- To reconstruct $g(t)$ exactly from its samples, the sampling frequency f_s must satisfy –

$$f_s \geq 2f_m$$

This minimum sampling frequency, $f_s = 2f_m$ is called the Nyquist Rate, and its reciprocal $T_s = 1/2f_m$ is the Nyquist Interval (the largest permissible sampling period without loss of information).

If $f_s < 2f_m$, aliasing occurs → higher frequency components in the signal fold back into lower frequencies, distorting the reconstructed signal and making exact recovery impossible.

Aliasing

Aliasing occurs when a continuous-time signal is sampled at a rate lower than twice its highest frequency component, that is, when $f_s < 2f_m$, where f_m is the maximum signal frequency.

When undersampling occurs, the spectral components of the signal overlap in the frequency domain, causing higher-frequency components to be misrepresented as lower-frequency components. This distortion, known as aliasing, results in a sampled signal that does not faithfully represent the original analog waveform.

An aliased signal introduces false frequency components that were not present in the original signal, leading to inaccurate reconstruction. In the figure, the inadequately sampled signal appears to have a lower frequency than the actual signal.

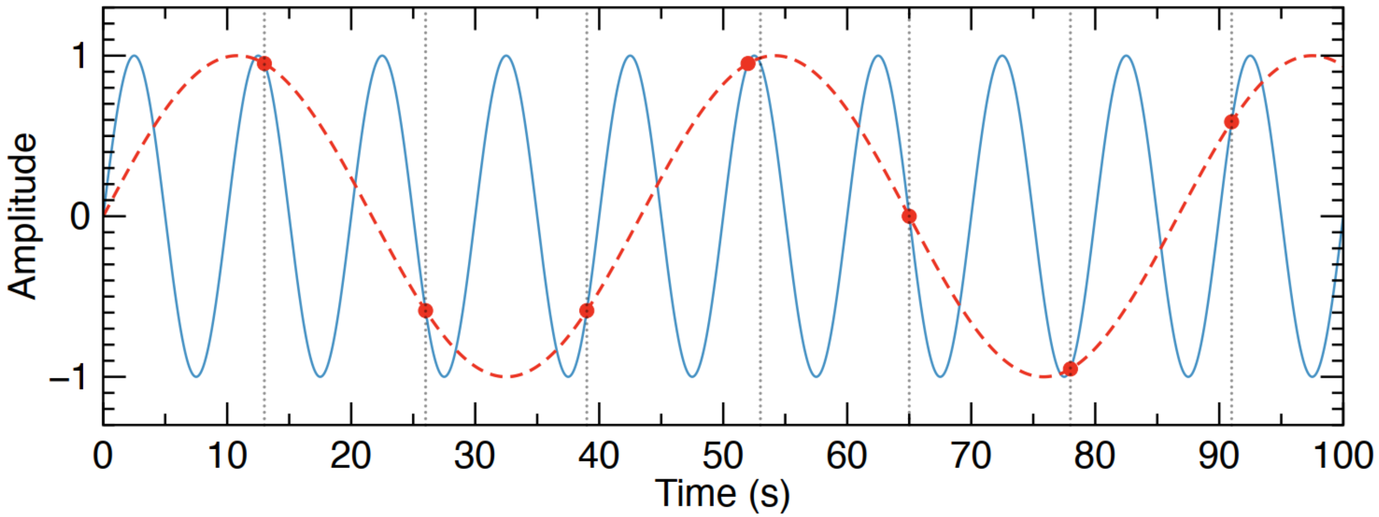

Sample and Hold Circuit

In most ADCs, the input signal must remain constant for a short period before conversion is complete. A sample and hold circuit maintains the input at a fixed level during this time, ensuring that conversion accuracy is not affected by signal changes.

When S is closed, V_c tracks the applied voltage V_{in}. When S is opened, capacitor retains the analog voltage applied at that instant of time.

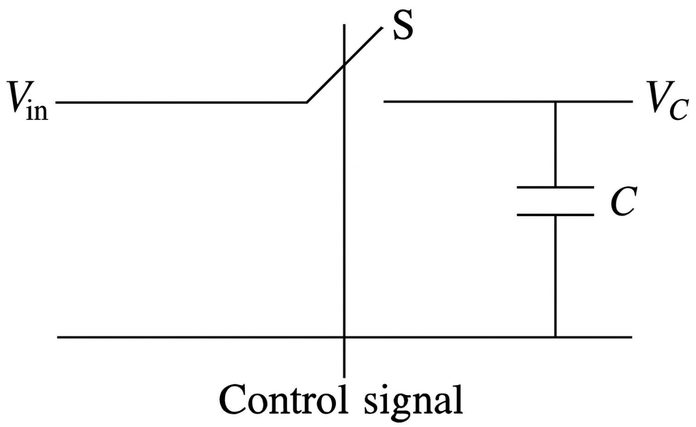

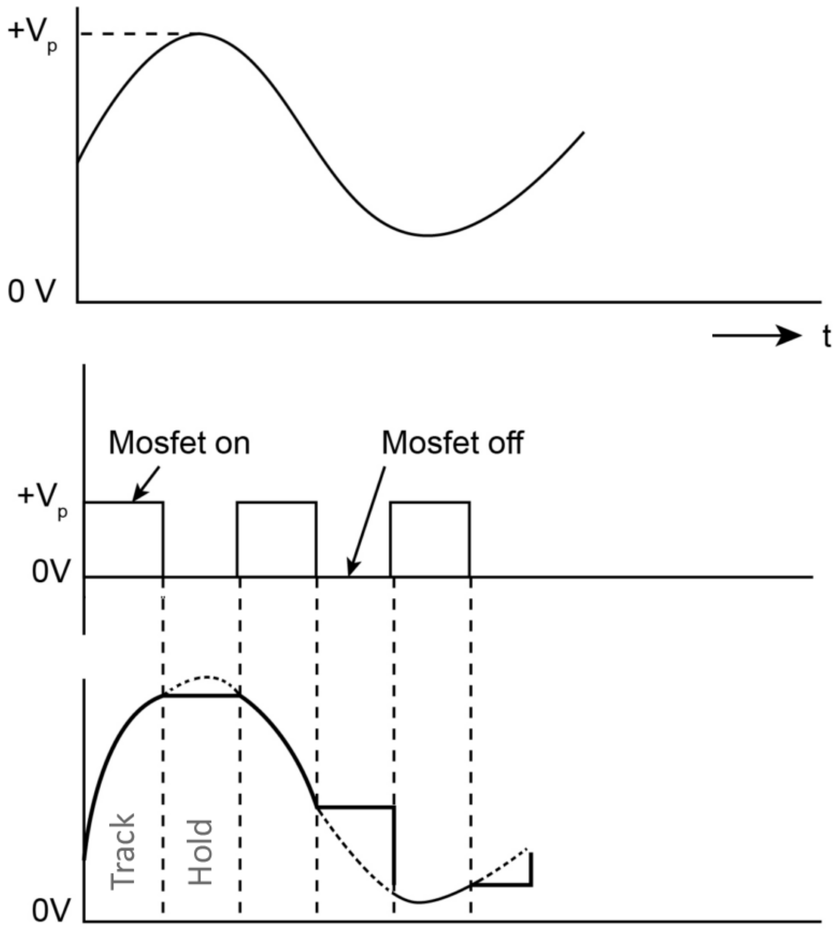

Sample and Hold Circuit

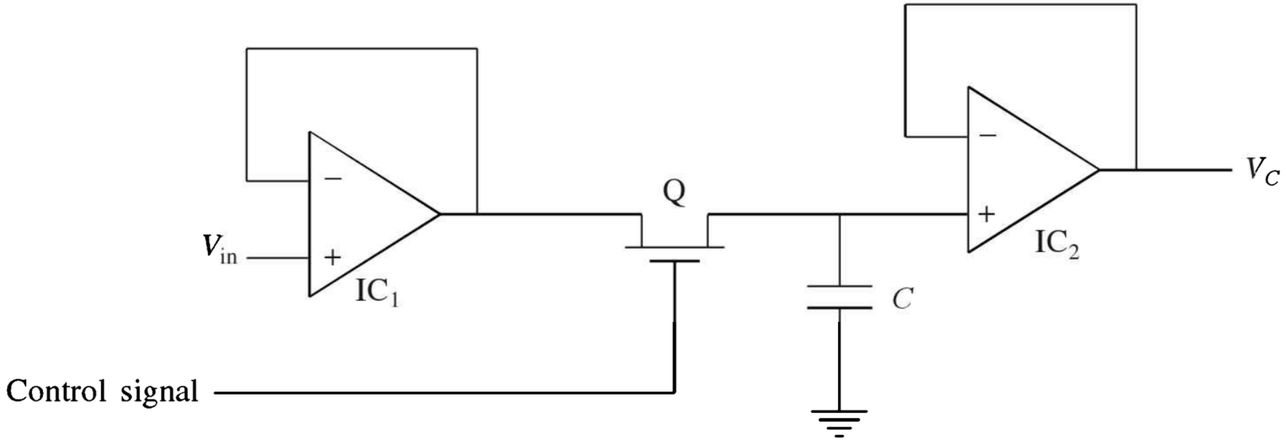

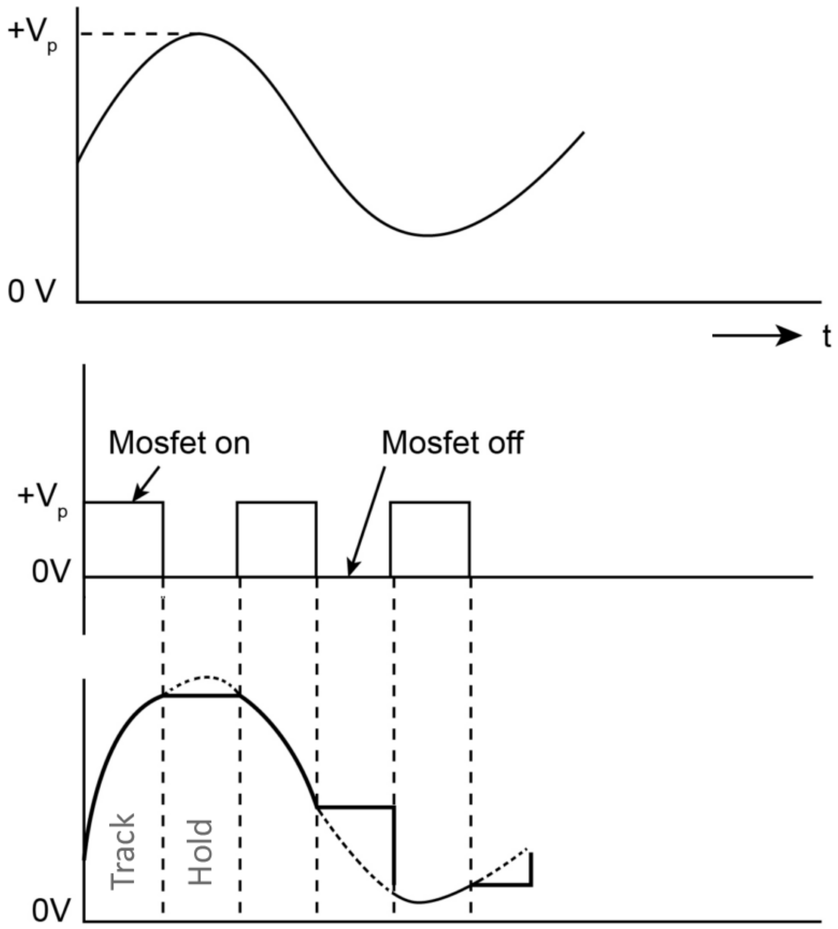

Response parameters of S/H Circuit

Aperture time: The time interval between the control signal's command to enter hold mode and the instant when the input signal is effectively disconnected from the hold capacitor. It represents the delay for the switch to fully open.

Acquisition time: Time it takes the output of the sample and hold circuit to 'track' the input signal within a specified accuracy.

Droop rate: The rate of change of the output voltage when the circuit is in the 'hold' mode. It is a function of the leakage or droop current, i_d, and the capacitance, C.

$$\frac{dV_C}{dt} = \frac{i_d}{C}$$

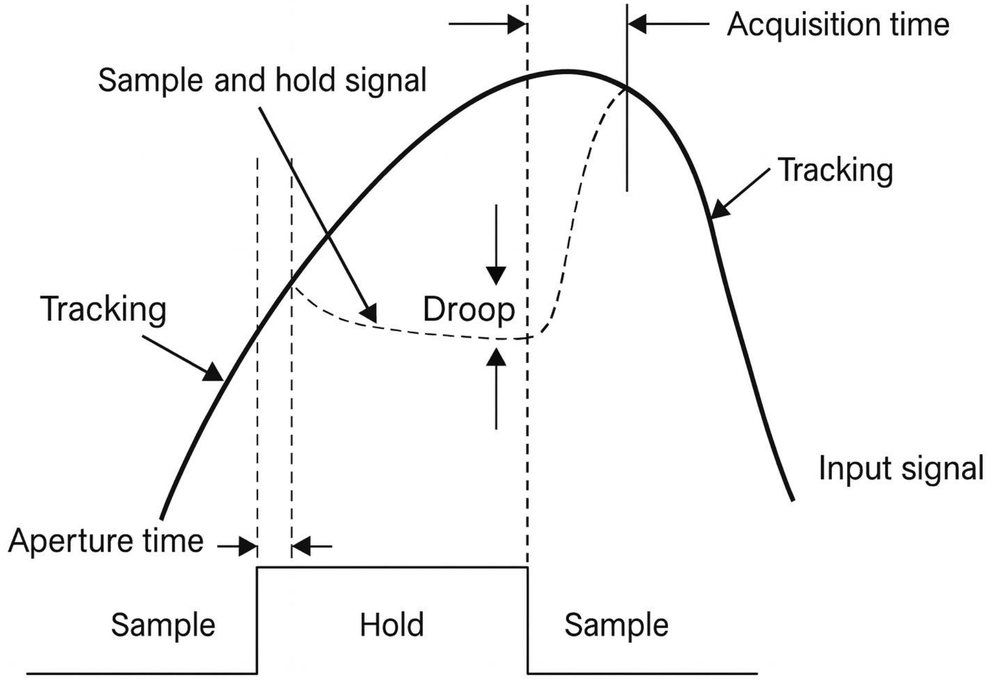

Quantization

Sampling produces a sequence of discrete-time pulses whose amplitudes can take any value within a continuous range bounded by a minimum and maximum limit.

Within these limits, the possible amplitude values are theoretically infinite, since they are continuous rather than quantized.

Quantization is breaking down the continuous amplitudes of the sampled signal into a set of finite number of quantized values/states.

Example:

We have an analog signal varying in the range from 0-10V. This range is separated into 8 discrete quantized states with 1.25V increments.

Output States	Discrete Voltage Ranges (V)
0	0.00 - 1.25
1	1.25 - 2.50
2	2.50 - 3.75
3	3.75 - 5.00
4	5.00 - 6.25
5	6.25 - 7.50
6	7.50 - 8.75
7	8.75 - 10.0

Quantization

Number of Quantization Levels

The number of discrete output levels (called quantization levels), L in an A/D converter is given by:

$$L = 2^N$$

Where, N is the number of bits in the A/D converter. For example, for a 3-bit A/D converter –

$$L = 2^N = 2^3 = 8$$

Quantization Step Size

The quantization step size, q is the smallest change in the analog input that results in a one-level change in the digital output, given by –

$$q = \frac{V_{\max} - V_{\min}}{L}$$

For example,

if $V_{\max} = 10\ \text{V}$ and $V_{\min} = 0\ \text{V}$ $\rightarrow$ $q = \frac{10-0}{8} = 1.25\ \text{V}$

Encoding

After Quantization, the signal is discrete in both time and amplitude.

Encoding is the process of representing each quantized amplitude level by a unique binary code so that it can be stored, processed, or transmitted digitally.

If there are L quantization levels, the number of bits required is –

$$N = \log_2 L$$

Example:

$L = 8 \rightarrow N = 3$ bits per sample. Table at the right shows an example of such encoding.

Output States	Discrete Voltage Ranges (V)	Binary Code
0	0.00 - 1.25	000
1	1.25 - 2.50	001
2	2.50 - 3.75	010
3	3.75 - 5.00	011
4	5.00 - 6.25	100
5	6.25 - 7.50	101
6	7.50 - 8.75	110
7	8.75 - 10.0	111

Types of ADC

- Flash A/D Converter
- Successive Approximation A/D Converter
- Dual Slope A/D Converter
- Delta-Sigma A/D Converter

Flash A/D Converter

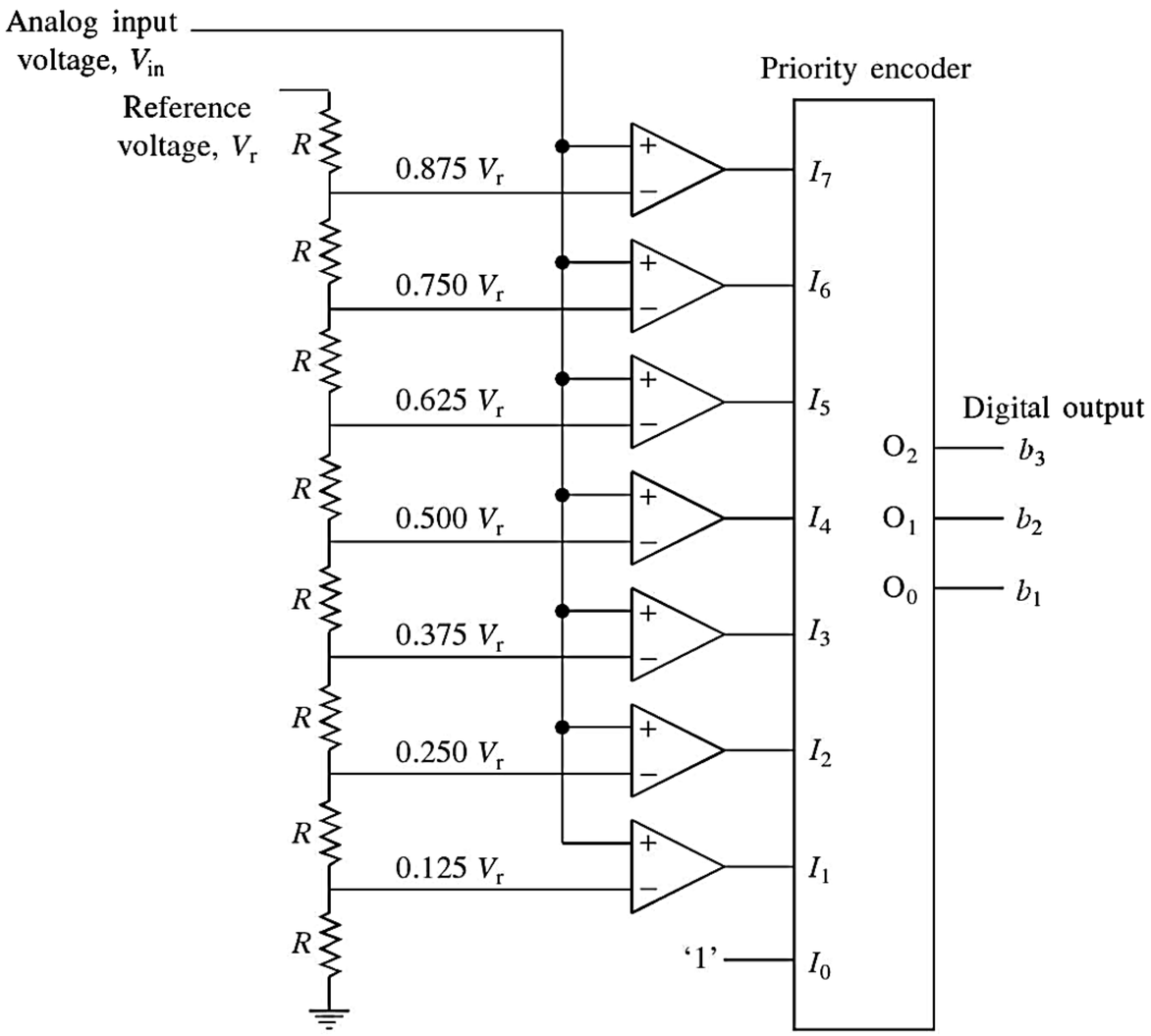

Flash A/D Converter

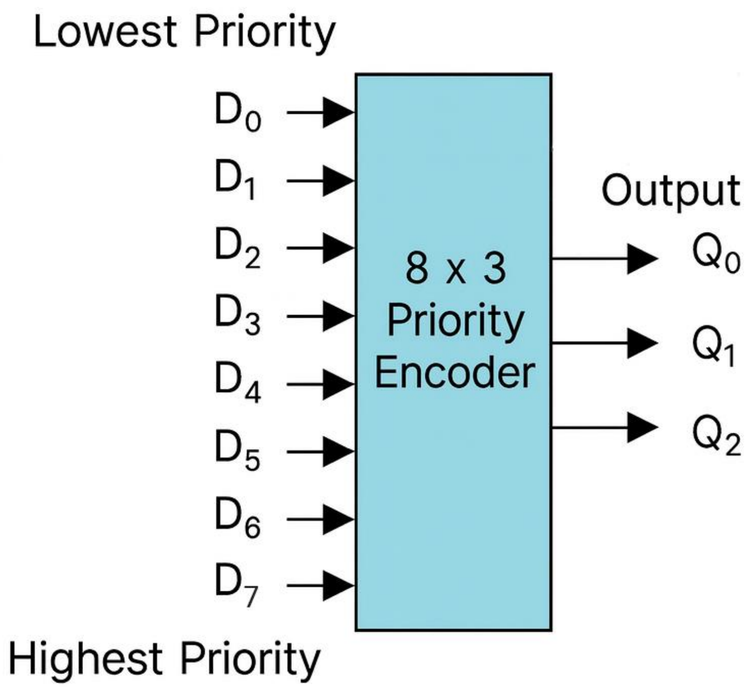

Inputs								Outputs		
D7	D6	D5	D4	D3	D2	D1	D0	Q2	Q1	Q0
0	0	0	0	0	0	0	1	0	0	0
0	0	0	0	0	0	1	x	0	0	1
0	0	0	0	0	1	x	x	0	1	0
0	0	0	0	1	x	x	x	0	1	1
0	0	0	1	x	x	x	x	1	0	0
0	0	1	x	x	x	x	x	1	0	1
0	1	x	x	x	x	x	x	1	1	0
1	x	x	x	x	x	x	x	1	1	1

Fig: 8 x 3 Priority Encoder

Flash A/D Converter

- Uses the 2^N resistors to form a ladder voltage divider, which divides the reference voltage into 2^N equal intervals
- Consists of a series of comparators, each one comparing the input signal to a unique reference voltage
- The comparator outputs connect to the inputs of a priority encoder circuit, which produces a binary output
- As the analog input voltage exceeds the reference voltage at each comparator, the comparator outputs will sequentially saturate to a high state
- The priority encoder generates a binary number based on the highest- order, ignoring all other active inputs

Flash A/D Converter

Advantages:

- Very Fast
- Very simple operational theory
- Speed is only limited by gate and comparator propagation delay

Disadvantages:

- Expensive
- Each additional bit of resolution requires twice the comparators

Successive Approximation ADC

- It consists of a Successive Approximation Register (SAR), DAC and comparator
- The output of SAR is given to N-bit DAC
- The equivalent analog output voltage of DAC, V_{DA} is applied to the inverting input of the comparator
- The second input to the comparator is the unknown analog input voltage V_{IN} passed through a S/H circuit
- The output of the comparator is used to activate the successive approximation logic of SAR

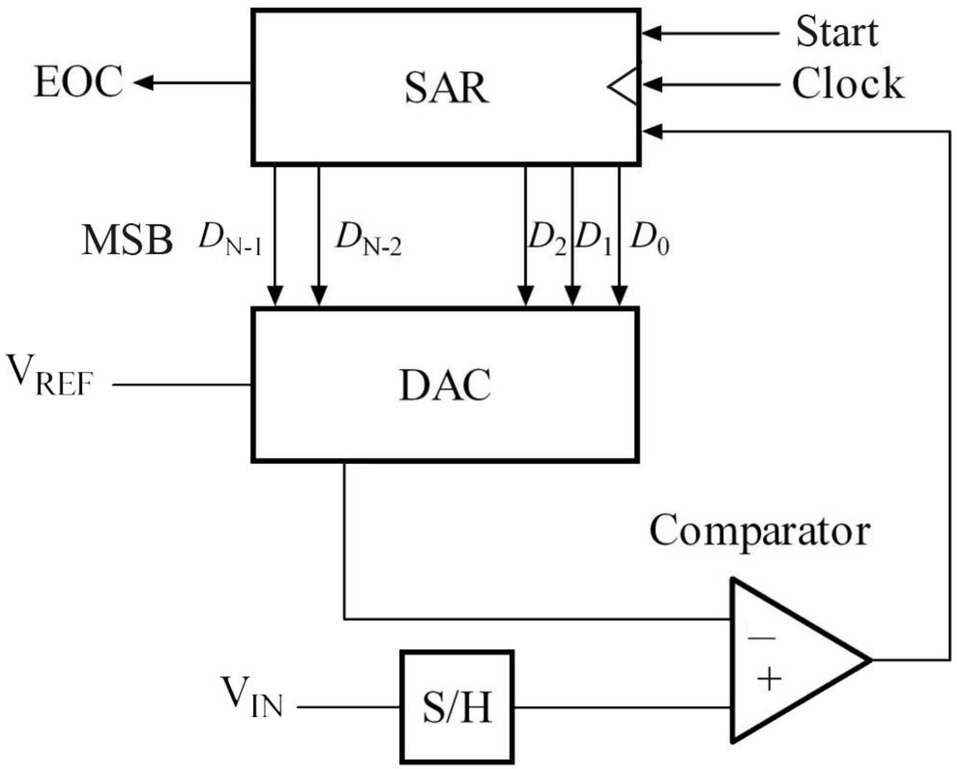

Successive Approximation ADC

- Upon receiving the Start signal, A/D conversion begins by setting the MSB = 1 and keeping rest of the bits = 0
- DAC converts the digital output of the SAR to analog signal, V_{DA} which is compared with V_{IN}
- If $V_{IN} > V_{DA}$; then MSB of SAR is kept at 1 and next lower significant bit is set to 1
- If $V_{IN} < V_{DA}$; then MSB of SAR is cleared to 0 and next lower significant bit is set to 1
- Again, DAC converts the digital output of the SAR and comparing V_{DA} with V_{IN} , the respective bit is either kept at 1 or cleared to 0

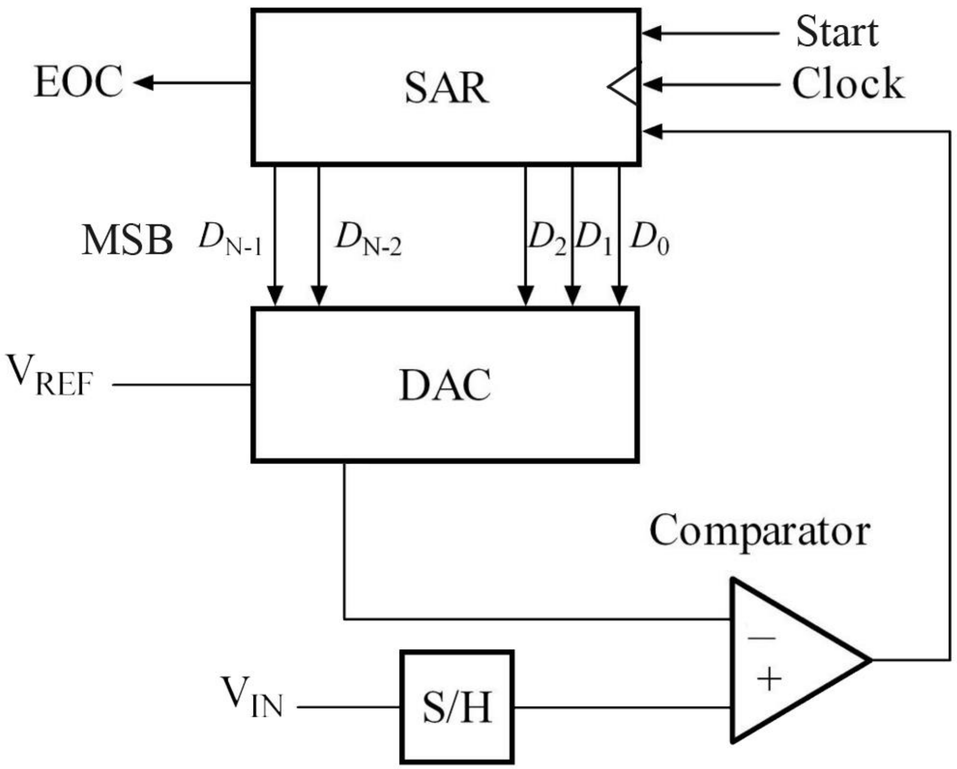

Successive Approximation ADC

- This process is repeated till all the bits have been checked
- A/D conversion is then complete, and SAR sends an EOC (End of Conversion) signal
- The contents of SAR are the Digital representation of V_{IN}

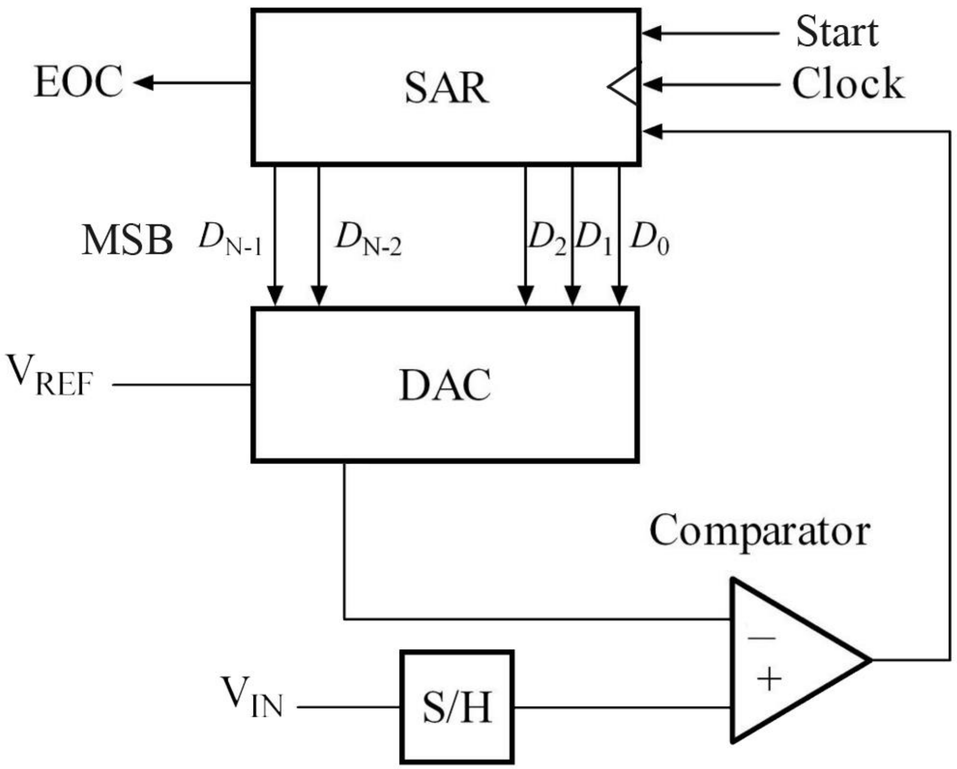

3-bit Successive Approximation ADC (Example)

D2	D1	D0	V_{DA}
0	0	0	0.00
0	0	1	1.25
0	1	0	2.50
0	1	1	3.75
1	0	0	5.00
1	0	1	6.25
1	1	0	7.50
1	1	1	8.75

Table: Input bit pattern and output analog voltage for 3-bit DAC (for $V_{REF} = 10V$)

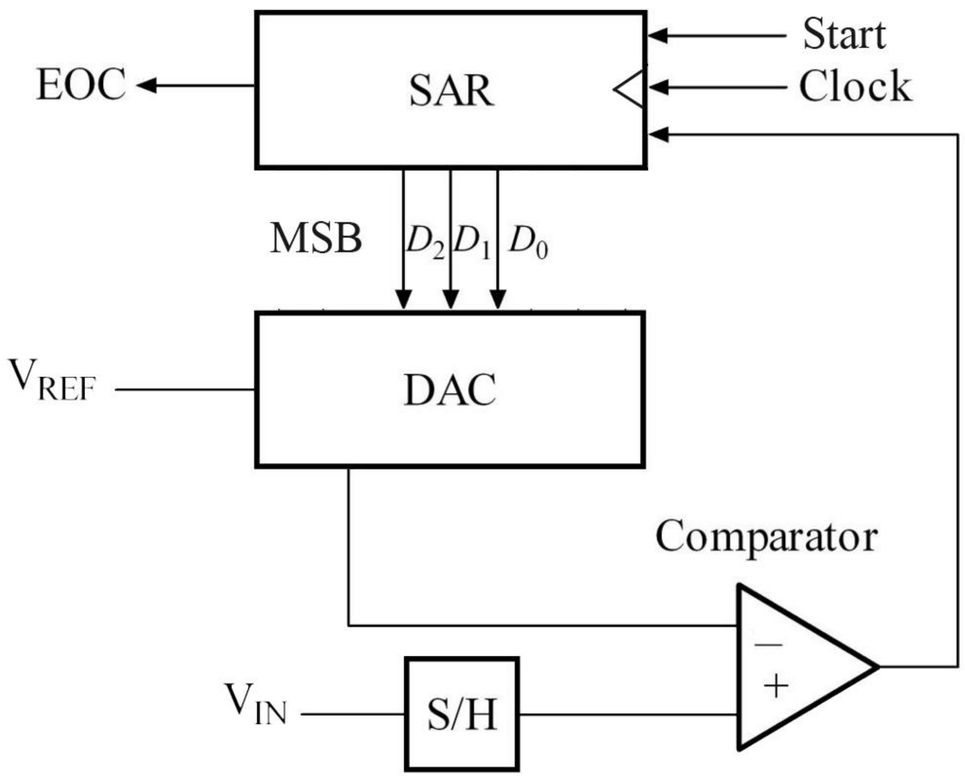

3-bit Successive Approximation ADC (Example)

Let, $V_{IN} = 3.2$ V and $V_{REF} = 10$ V

A/D conversion takes place according to the following 3 cycles –

MSB (D_2) = 1 , D_1 = 0 , D_0 = 0

Input to DAC is '1 0 0'

According to the table from previous page, $V_{DA} = 5$ V

As, $V_{IN} < V_{DA}$, D_2 is cleared to 0.

Resulting bit pattern at this stage –

0	0	0

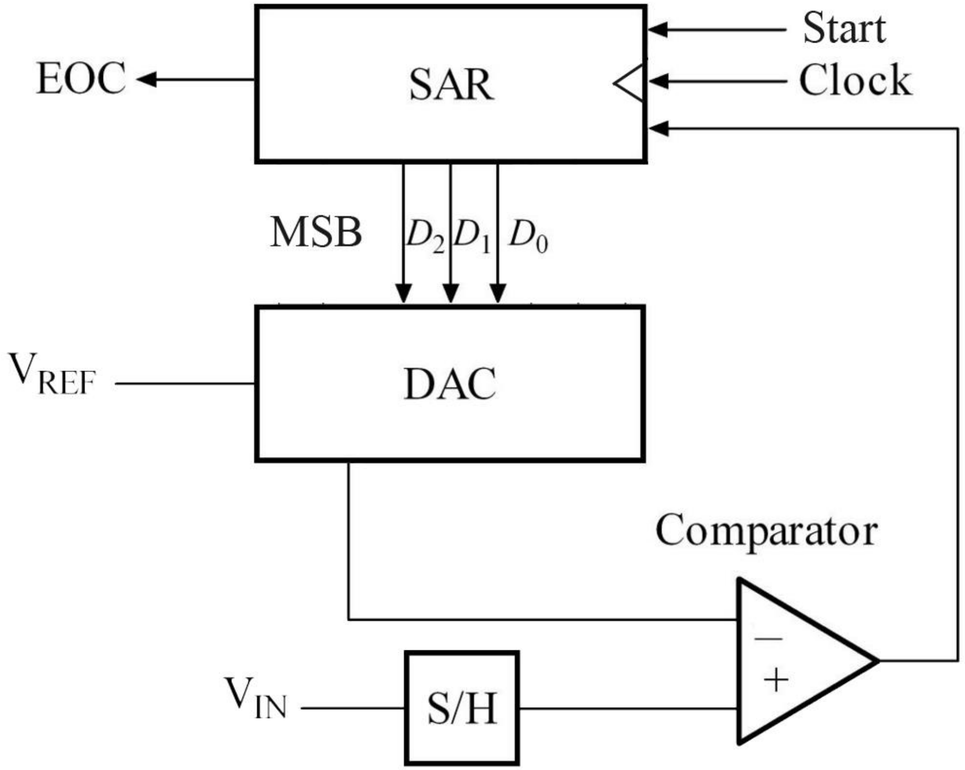

3-bit Successive Approximation ADC (Example)

Next, D_1 is set to 1.

Input to DAC is ‘ 0 1 0 ’

According to the table,

$V_{DA} = 2.5$ V

As, $V_{IN} > V_{DA}$, D_1 is unchanged.

Updated bit pattern at this stage –

0	1	0

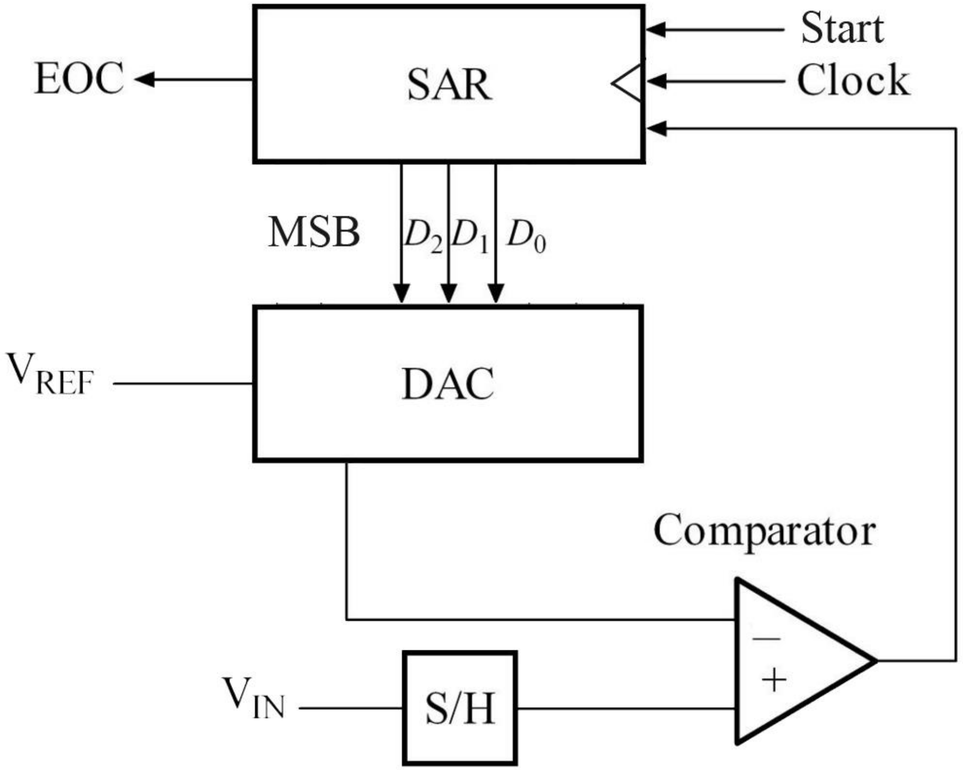

3-bit Successive Approximation ADC (Example)

Next, D_0 is set to 1.

Input to DAC is ‘ 0 1 1 ’

According to the table,

$V_{DA} = 3.75$ V

As, $V_{IN} < V_{DA}$, D_0 is cleared to 0.

Updated bit pattern at this stage:

0	1	0

A/D conversion is completed and the digital representation of $V_{IN} = 3.2$ V is ‘ 0 1 0 ’

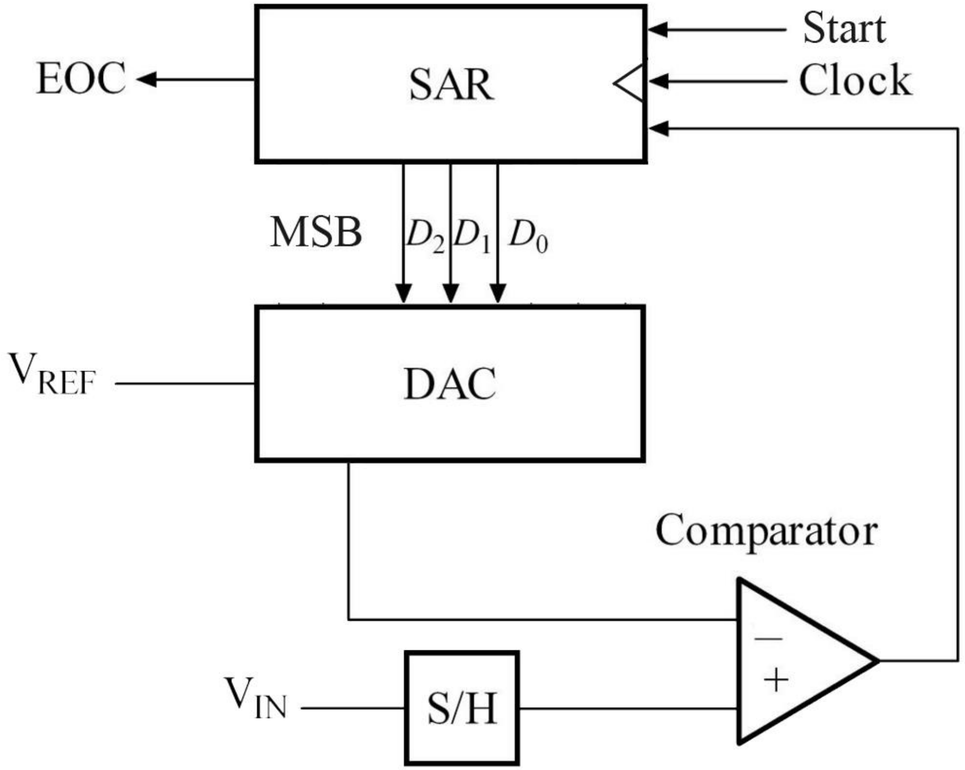

3-bit Successive Approximation ADC (Example)

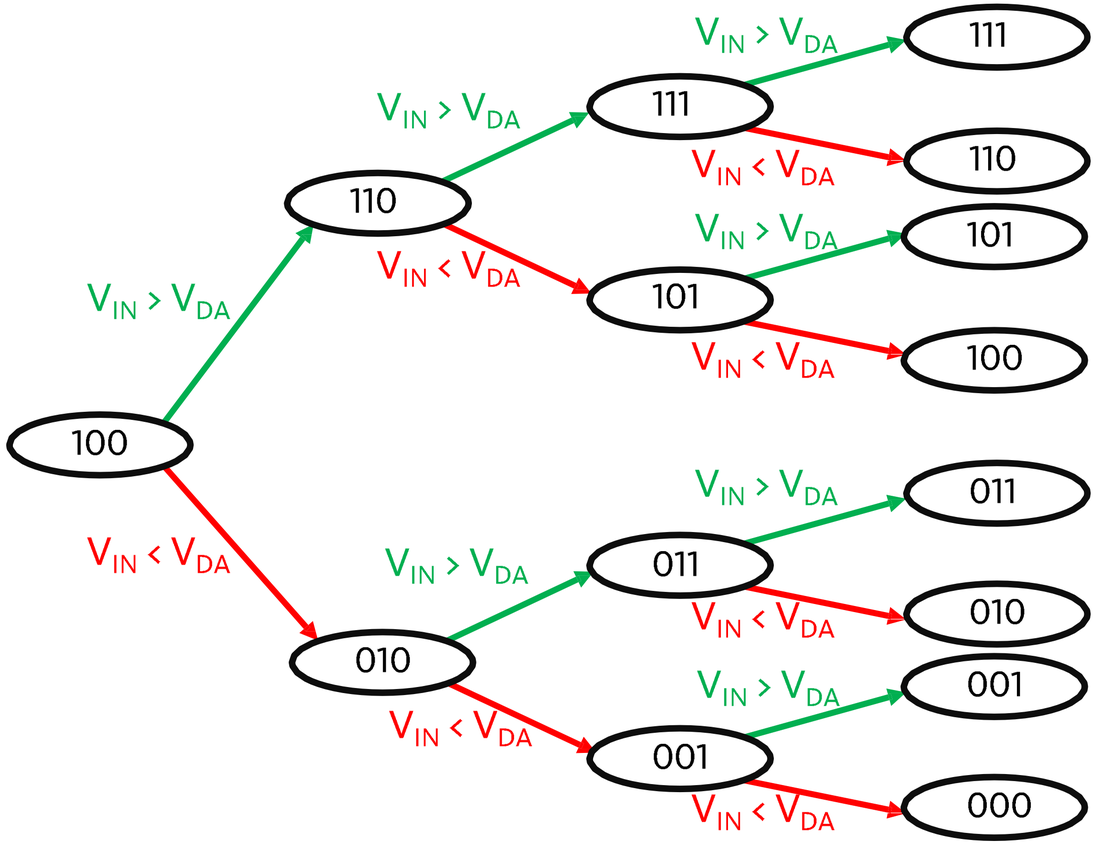

Fig: Conversion sequence of 3-bit successive approximation ADC

Successive Approximation ADC

Advantages:

- Capable of high speed and reliable
- Medium accuracy compared to other ADC types
- Good tradeoff between speed and cost

Disadvantages:

- Higher resolution successive approximation ADCs will be slower

Single Slope ADC

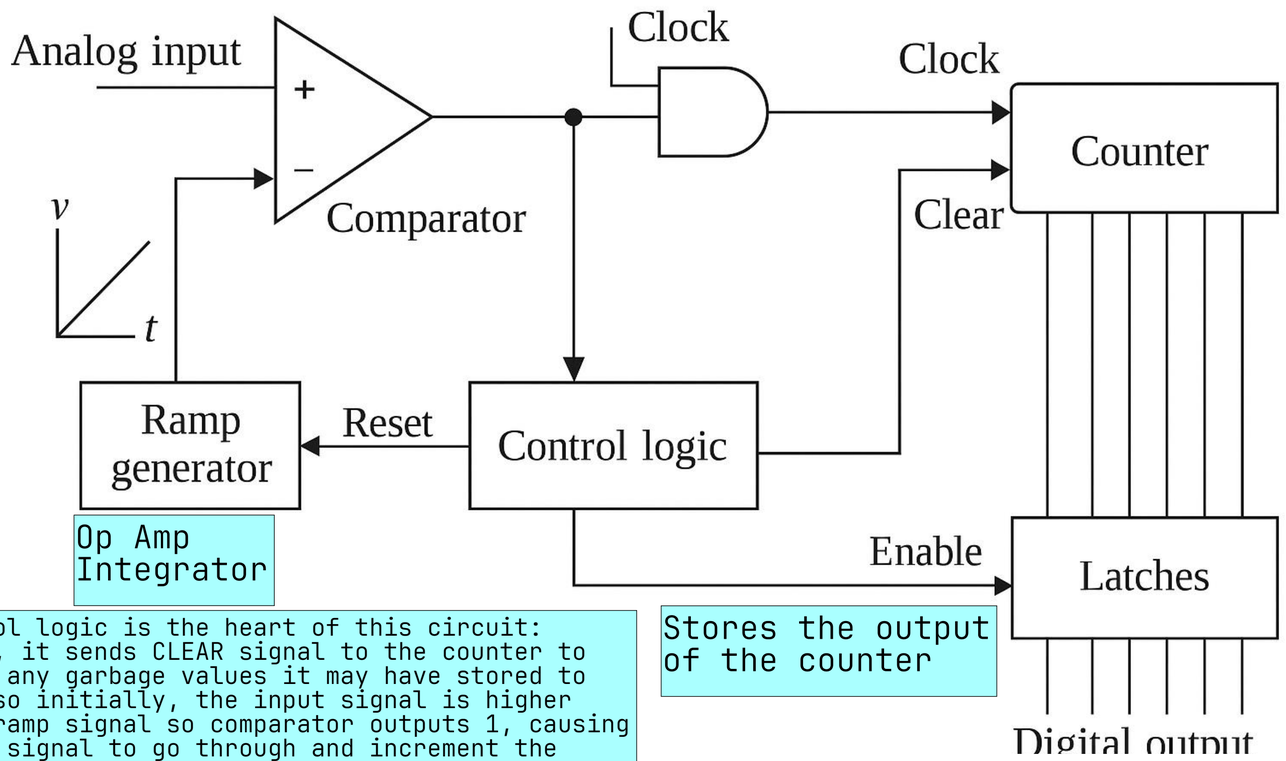

Op Amp Integrator

Increments by one every clock pulse

Stores the output of the counter

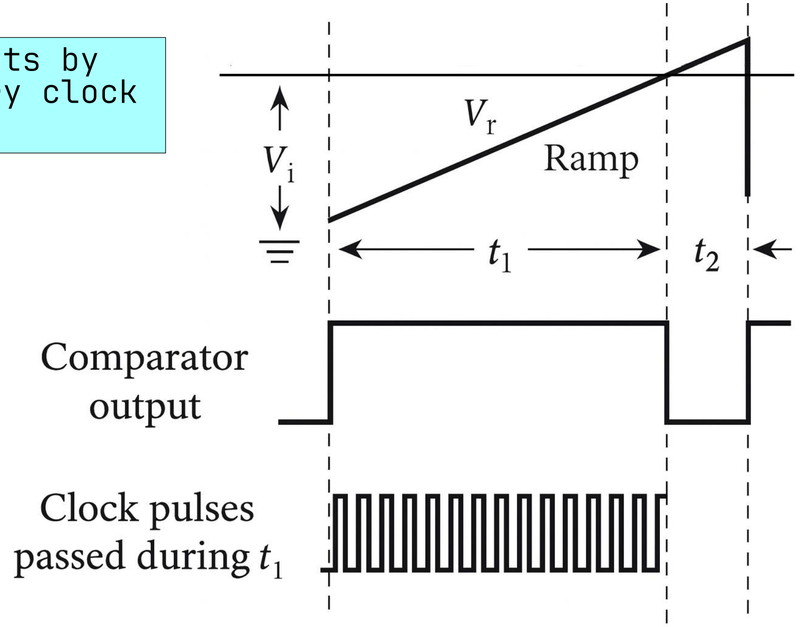

The control logic is the heart of this circuit: Initially, it sends CLEAR signal to the counter to clear out any garbage values it may have stored to 00..0. Also initially, the input signal is higher than the ramp signal so comparator outputs 1, causing the CLOCK signal to go through and increment the counter.
When the ramp signal exceeds the input signal, comparator output 0 and thus the counter stops incrementing. The control logic recognizes this through the comparator output and thus sends an enable signal to the latches to store the value and resets the ramp generator and counter for the next sample

$$V_{r\to t_1} = -\frac{1}{RC}\int_0^{t_1}(-V_{ref})\,dt$$

$$= \frac{V_{ref}}{RC} \times t_1 = V_i$$

Digital output

$$t_1 = n \times T_{CLK}$$

$$\boxed{V_i = \frac{V_{ref} \times n \times T_{CLK}}{RC}} \rightarrow n = \frac{V_i \times RC}{V_{ref} \times T_{CLK}}$$

T_{CLK}

-to-Ana

Dual Slope ADC

intially the input for the integrator ramp generaro is taken in from the -Vin, the comparator outputs 0 and Vb rises. The control logic lets the clock pass through and increment the counter. This takes place for a fixed amount of time regardless of Vin.
Eventually the counter overflows and sends a signal to the control logic which then switches the input of the integrator to Vref. Vref is positive so a downward slope is formed on the graph.

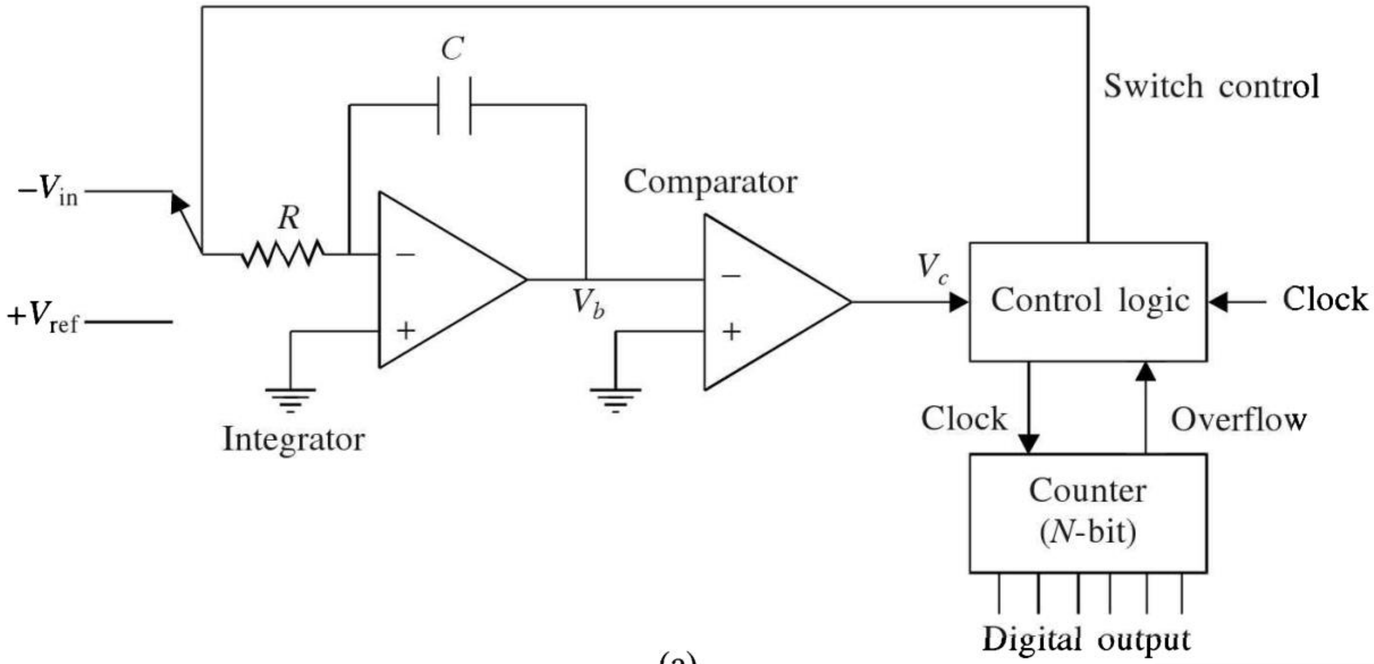

(a)

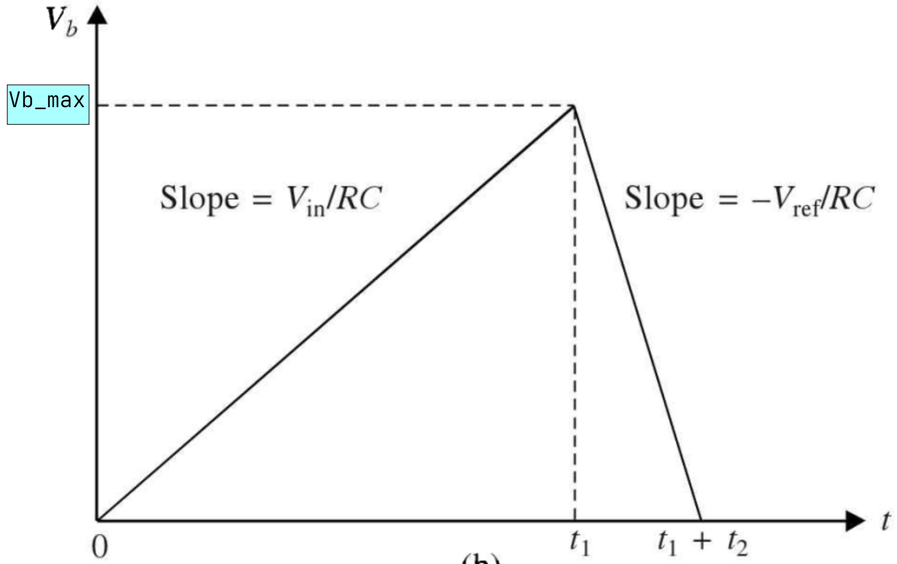

(b)

$$V_{bmax} = -\frac{1}{RC}\int_0^{t_1}(-V_{in})\,dt = \frac{V_{in} \times t_1}{RC}$$

$$V_{b_2} = -\frac{1}{RC}\int_{t_1}^{t_1+t_2} V_{ref}\,dt = -\frac{V_{ref} \times t_2}{RC}$$

$$V_{in} \times t_1 = V_{ref} \times t_2 \qquad t_1 = 2^N \times T_{CLK}$$

$$\Rightarrow V_{in} \times 2^N = V_{ref} \times n \qquad t_2 = n \times T_{CLK}$$

$$\Rightarrow n = \frac{V_{in}}{V_{ref}} \times 2^N$$